| TYPE | YEAR | PROJECT NO. | SHEET NO. |
|---|---|---|---|
| R.O.W. | 2015 | HSIP-106(33) | 2B |
| CONST. | 2017 | HSIP-106(33) | 2B2 |
| | | | |
| | | | |

# CRITZ LANE

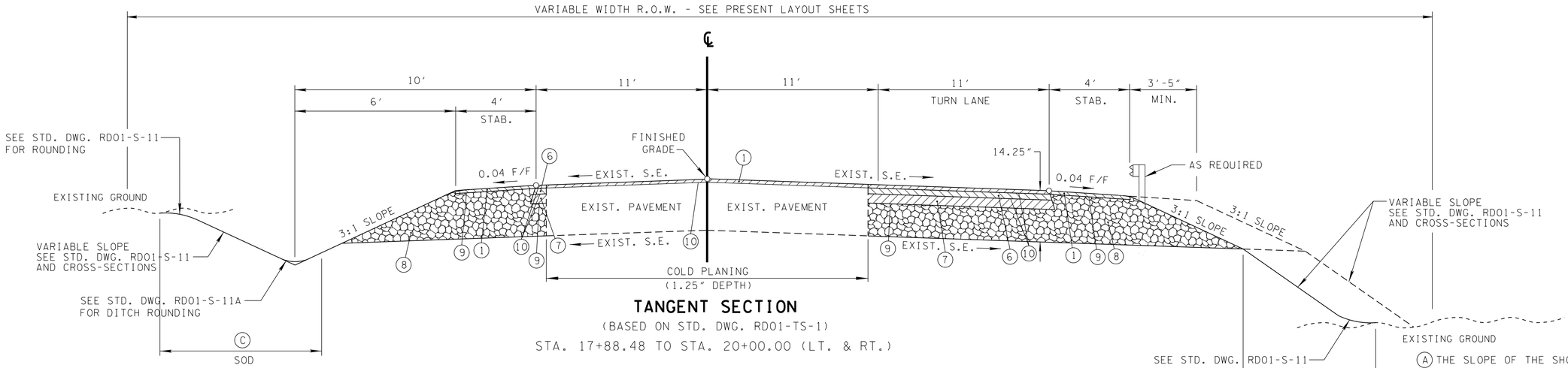


## TANGENT SECTION

(BASED ON STD. DWG. RD01-TS-1)

STA. 17+88.48 TO STA. 20+00.00 (LT. & RT.)

(A) THE SLOPE OF THE SHOULDER AND ROADWAY PAVEMENT SHALL NOT EXCEED AN ALGEBRAIC DIFFERENCE OF 0.07 F/F.

(B) LANE WIDTHS TRANSITIONS FROM MATCH EXISTING @ STA. 16+23.00 TO 11′ @ STA. 16+34.00

(C) SEE DITCH DETAIL SHEET 2F FOR DITCH LINING SPECIFIED.

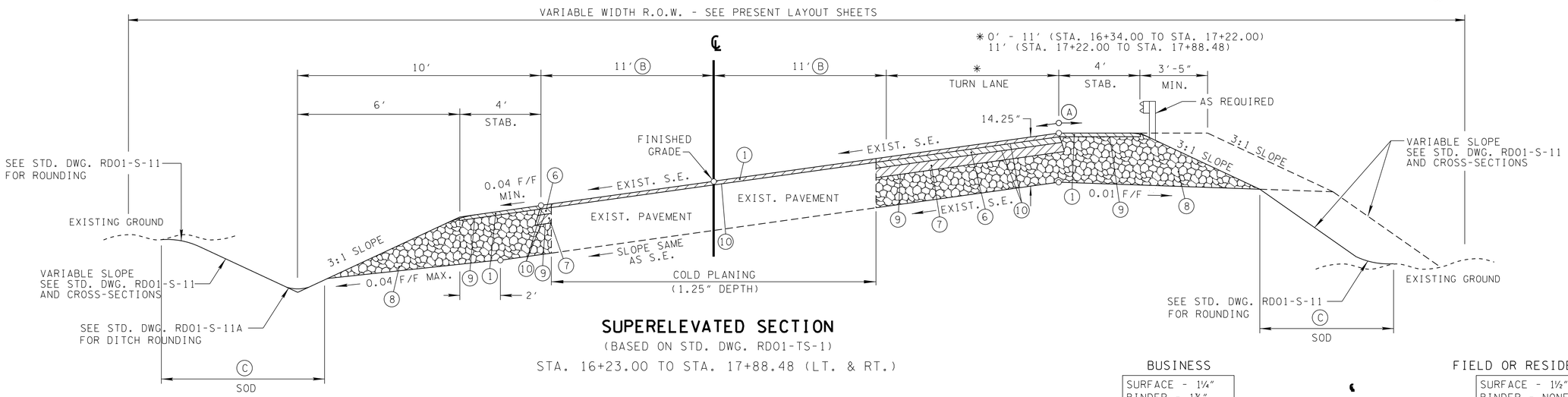


## SUPERELEVATED SECTION

(BASED ON STD. DWG. RD01-TS-1)

STA. 16+23.00 TO STA. 17+88.48 (LT. & RT.)

### PROPOSED PAVEMENT SCHEDULE

| | | | |
|---|---|---|---|
| 1 | GRADING "D" SURFACE @ 1.25" THICK (132.5±LB / SY)<br>411-02.10 - ACS MIX (PG70-22) GRADING D | 6 | GRADING "B-M2" MIXTURE (BINDER) @ 2" THICK (226±LB / SY)<br>307-02.08 - ASPHALT CONCRETE MIX (PG70-22)(BPMB-HM) GRADING B-M2 |
| 2 | GRADING "B-M2" MIXTURE (BINDER) @ 2.5" THICK (282.5±LB / SY)<br>307-02.08 - ASPHALT CONCRETE MIX (PG70-22)(BPMB-HM) GRADING B-M2 | 7 | GRADING "A" MIXTURE (BLACK BASE) @ 3" THICK (345±LB / SY)<br>307-02.01 - ASPHALT CONCRETE MIX (PG70-22)(BPMB-HM) GRADING A |
| 3 | GRADING "A" MIXTURE (BLACK BASE) @ 4" THICK (460±LB / SY)<br>307-02.01 - ASPHALT CONCRETE MIX (PG70-22)(BPMB-HM) GRADING A | 8 | MINERAL AGGREGATE BASE @ 8" THICK (ROADWAY), 13" THICK (SHOULDER)<br>303-01 - MINERAL AGGREGATE, TYPE A BASE, GRADING D |
| 4 | GRADING "E" SHOULDERS @ 1.50" THICK (154.5±LB / SY)<br>411-01.07 - ASPHALT CONCRETE MIX (PG64-22) GRADING E (SHOULDER) | 9 | PRIME COAT<br>402-01 - BITUMINOUS MATERIAL FOR PRIME COAT (PC) (0.30-0.35 gal./SY)<br>402-02 - AGGREGATE FOR COVER MATERIAL (PC) (8-12 LB/SY) |
| 5 | MINERAL AGGREGATE BASE @ 10" THICK (ROADWAY), 16.25" THICK (SHOULDER)<br>303-01 - MINERAL AGGREGATE, TYPE A BASE, GRADING D | 10 | TACK COAT<br>403-01 - BITUMINOUS MATERIAL FOR TACK COAT (TC) (0.05-0.10 gal./SY)(GENERAL USE)<br>(0.08-0.12 gal./SY)(MILLING-COLD PLANE) |

BUSINESS

SURFACE - 1¼″
BINDER - 1¾″
BASE - 4″

FIELD OR RESIDENTIAL

SURFACE - 1½″
BINDER - NONE
BASE - 4″

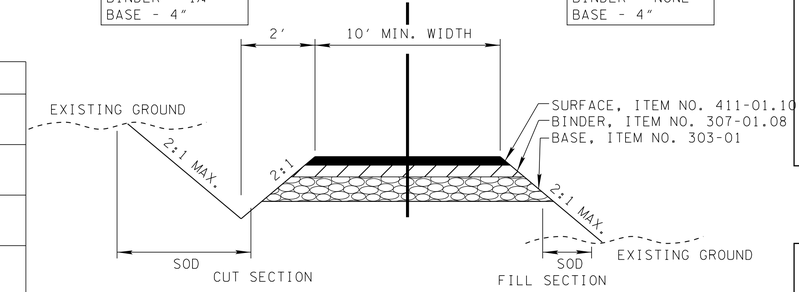


## TYPICAL SECTION

PRIVATE DRIVE TO BUSINESS, FIELD, OR RESIDENTIAL PROPERTY

NOTE: DITCH TO BE CONSTRUCTED WHERE DIRECTED BY THE ENGINEER

SEALED BY

NOT TO SCALE

STATE OF TENNESSEE
DEPARTMENT OF TRANSPORTATION

# TYPICAL SECTIONS AND PAVEMENT SCHEDULE

9/18/2017 5:03:35 PM
T:\TDOT\Williamson_SR106_Critz\002B2.sht