| TYPE | YEAR | PROJECT NO. | SHEET NO. |
|---|---|---|---|
| CONST. | 2017 | HSIP-106(33) | 20L |
| | | | |
| | | | |
| | | | |

PHASE 3:

SHIFT TRAFFIC FROM PHASE 2 ONTO NEW WIDENED AREA ALONG THE WESTERN SIDE OF SR-106.

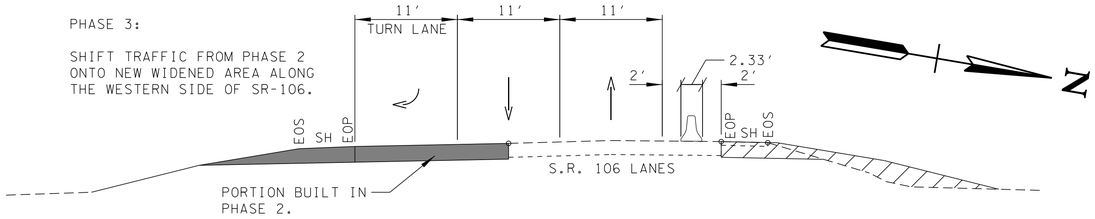


120

125

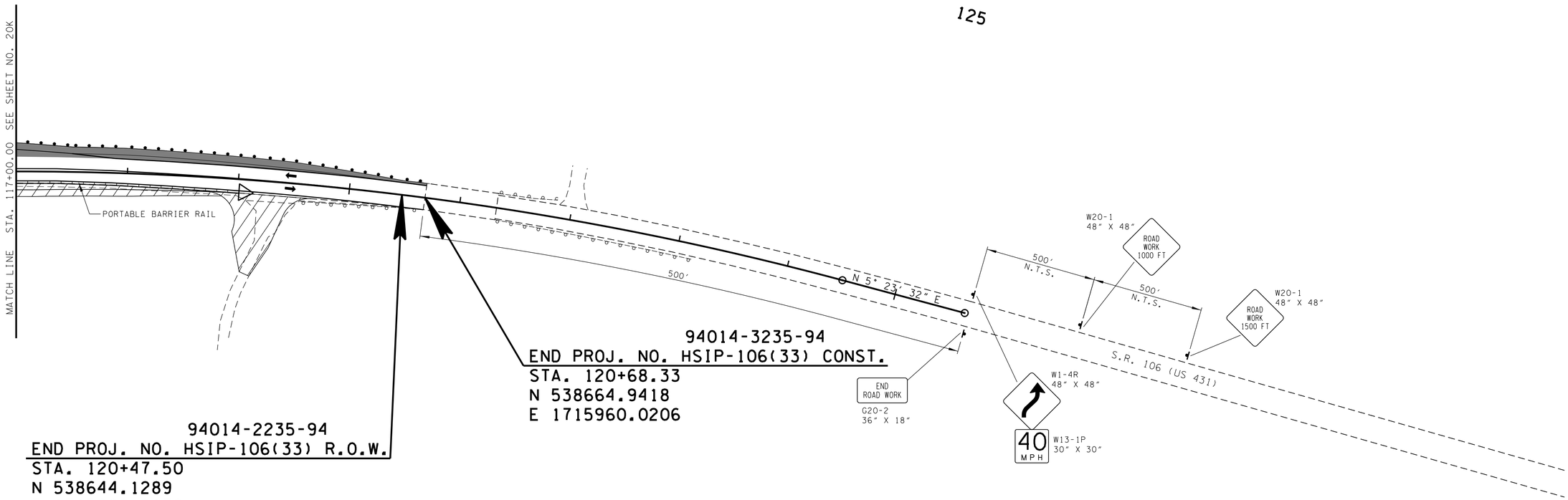


SEALED BY

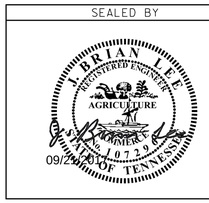


PHASE 3:
1 - INSTALL SIGNS, REMOVE CONFLICTING EXIST. PAVEMENT MARKINGS, INSTALL TEMP. PAVEMENT MARKINGS, AND INSTALL TEMP. PORTABLE BARRIER RAIL ALONG EXIST. NORTHBOUND EDGE OF PAVEMENT.
2 - SHIFT TRAFFIC ONTO NEWLY WIDENED WEST SIDE OF SR-106.
3 - WIDEN EAST SIDE OF SR-106.

TRAFFIC CONTROL LEGEND

| SYMBOL | ITEM |
|---|---|
| | WORK ZONE |
| | SIGN (CONSTRUCTION) |
| | CONST. COMPLETED IN PREVIOUS PHASE |
| | PORTABLE BARRIER RAIL |
| | TEMPORARY ATTENUATOR |

STATE OF TENNESSEE
DEPARTMENT OF TRANSPORTATION

# TRAFFIC CONTROL PLAN PHASE 3

STA.117+00 TO E.O.P.

SCALE: 1"=50'

09/20/2017 9:22:36 AM
T:\TDOT\Williamson_SR106_Critz\020L.sht