TENNESSEE D.O.T.
DESIGN DIVISION
FILE NO. ____

| TENN. | YEAR | SHEET NO. |
|---|---|---|
| | 2017 | U1-1 |
| STATE PROJ. NO. | HSIP-106(33) | |
| FED. AID PROJ. NO. | 94014-3235-94 | |

| Index Of Sheets | |
|---|---|
| SHEET NAME | SHEET NUMBER |
| UTILITIES INDEX, UTILITIES OWNERS | U1-1 |
| MTEMC, HB & TS U1 SHEETS | U1-2 THRU U1-3 |
| HB & TS | U2-1 THRU U2-5 |

# STATE OF TENNESSEE
# DEPARTMENT OF TRANSPORTATION
# BUREAU OF ENGINEERING

# WILLIAMSON COUNTY

STATE ROUTE 106
INTERSECTION AT CRITZ LANE

STATE HIGHWAY NO. 106 F.A.H.S. -N/A

## STANDARD LEGEND

EXISTING UTILITES

POWER
TELEPHONE
WATER
CABLE TV
SANITARY SEWER
UNDERGROUND TELEPHONE
GAS
FORCE MAIN SEWER
UNDERGROUND POWER
UNDERGROUND FIBER OPTIC

POWER POLE
TELEPHONE POLE
POWER/TELEPHONE POLE
MANHOLE
WATER METER W.M.
WATER VALVE W.V.
LIGHT POLE

PROPOSED UTILITIES & MODIFICATIONS

POWER
UNDERGROUND POWER
TELEPHONE
WATER
CABLE TV
UNDERGROUND TELEPHONE
GAS
FORCE MAIN SEWER
UNDERGROUND FIBER OPTIC

POWER POLE P
TELEPHONE POLE T
WATER METER W.M.

EX. WATER LINE (RETIRED IN PLACE) — 6" W RIP
EX.GAS LINE (RETIRED IN PLACE) — 8" G RIP
EX.SEWER LINE (RETIRED IN PLACE) — 8" FMS RIP
EX.TELEPHONE LINE (RETIRED IN PLACE) — T(UG) RIP

R REMOVE A ABANDON

## UTILITY OWNERS AND CONTACTS:

| | | | |
|---|---|---|---|
| TELEPHONE: | AT&T<br>333 COMMERCE STREET<br>ROOM 23C142<br>NASHVILLEL,TN 37201<br>KIM BEAN<br>KB1078@att.com<br>O: 615-214-7318<br>C: 615-955-0653 | ELECTRIC: | MIDDLE TN ELECTRIC MEMBERSHIP<br>555 NEW SALEM ROAD<br>MURFREESBORO, TN 37129<br>MATHUE BEAN<br>mbean@mtemc.com<br>O: 615-494-1548 |
| WATER, SEWER AND GAS: | HB & TS UTILITY DIST. OF WILLIAMSON CO.<br>505 DOWNS BLVD.<br>FRANKLIN, TN 37064<br>THOMAS PUCKETT<br>TPUCKETT_HBTS@BELLSOUTH.NET<br>O:615-794-7796 X113 | CABLE: | COMCAST (XFINITY)<br>2501 McGAVOCK PIKE<br>NASHVILLE, TN 37214<br>LARRY K. WINBURN<br>larry_winburn@cable.comcast.com<br>O: 615-244-7462 X-1115140<br>C: 615-295-9069 |

## SPECIAL NOTES

SOME UTILITIES CAN BE LOCATED BY CALLING THE TENNESSEE ONE CALL SYSTEM, INC. AT 1-800-351-1111

5/1/2017 2:03:45 PM
\\j03wf01\03shared\SURVEY\DESIGN\U_I_Sheets\U19837.00-Williamson\U19837-00-ROW-Rev-02-20-17_U19837.00_Titlesheet - U1-1.dgn

| TYPE | YEAR | PROJECT NO. | SHEET NO. |
|---|---|---|---|
| CONST. | 2017 | HSIP-106(33) | U1-2 |
| | | | |
| | | | |
| | | | |

REV. 3-14-16: REMOVED TRACT 3 AND ADDED TRACTS 3A AND 3B.

REV. 4-08-16: REMOVED TRACTS 3A AND 3B. AND COMBINED INTO TRACT 3.

REV. 9-22-16: ADJUSTED PROPOSED R.O.W. AND TEMP. CONST. ESMT. FOR EPSC DEVICES AND ADDED SLOPE AND 10' CONST. ESMT. ALONG CRITZ LANE FOR TRACT 1. MOVED 20' BUS. ENT. FROM STA. 18+82 TO 18+97 RT.

REV. 12-08-16: ADJUSTED PROPOSED R.O.W. AND TOE OF SLOPES FOR TRACT 2. ADJUSTED SEPTIC FIELD LINES FOR TRACTS 3 AND 4.

REV. 02-20-17: ADJUSTED DITCHES, SIDE DRAIN, AND PRIVATE DRIVE WIDTH LEFT STA. 16+04.

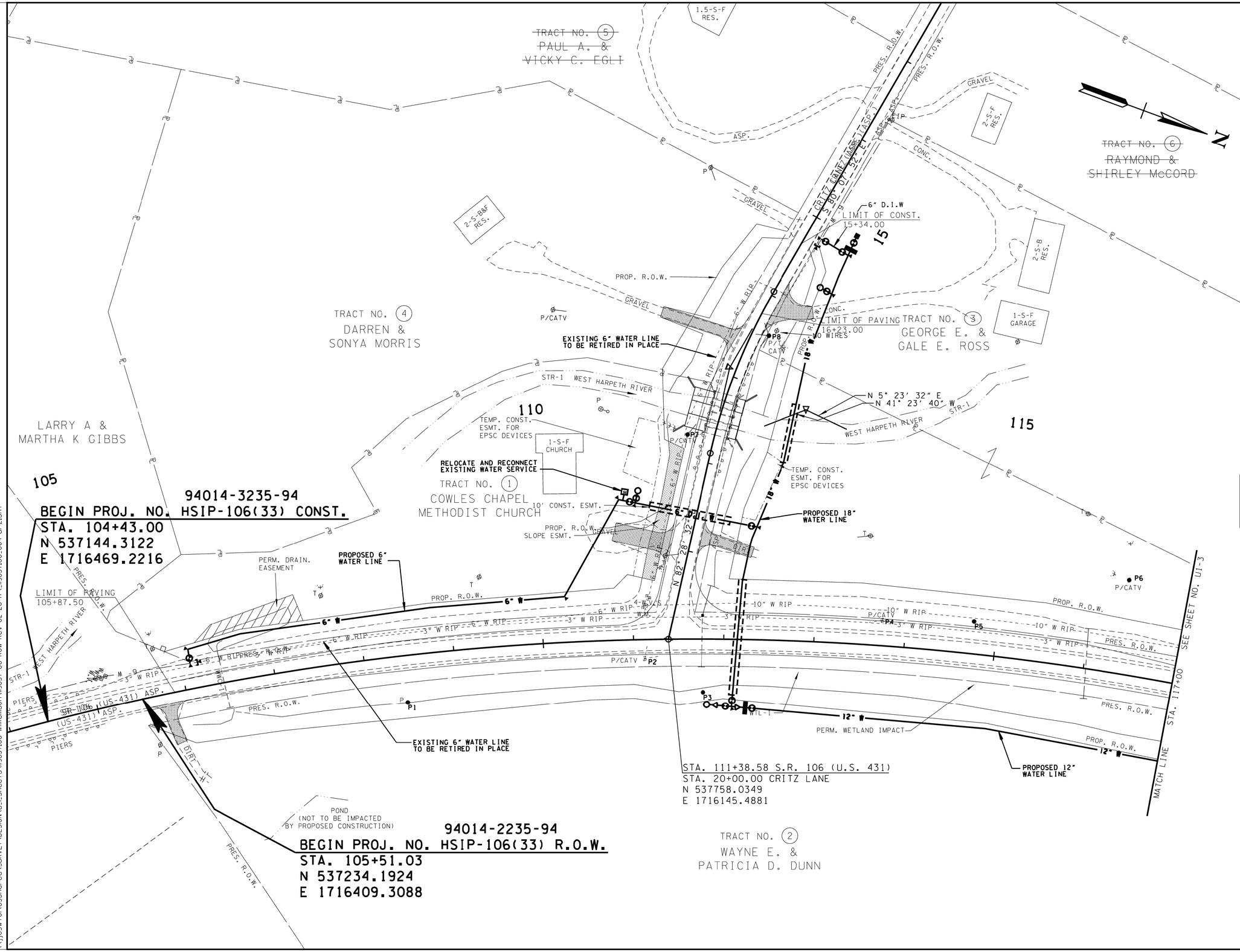


SEE SHEET 4C (R.O.W. DETAIL SHEET) FOR BEARINGS & DISTANCES AND STATIONS & OFFSETS ON R.O.W. & PROPERTY

SEALED BY

COORDINATES ARE NAD/83(1995), ARE DATUM ADJUSTED BY THE FACTOR OF 1.00008 AND TIED TO THE TGRN. ALL ELEVATIONS ARE REFERENCED TO THE NAVD 1988.

STATE OF TENNESSEE
DEPARTMENT OF TRANSPORTATION

# UTILITIES

STA.104+43 TO STA.117+00

SCALE: 1"=50'

5/1/2017 11:45:38 AM
\\tj03wf01\03shared\SURVEY\DESIGN\U_1_Sheets\19837.00-Williamson\19837-00-ROW-Rev-02-20-17_19837.00_004-U1-2.sht

| TYPE | YEAR | PROJECT NO. | SHEET NO. |
|---|---|---|---|
| CONST. | 2017 | HSIP-106(33) | U1-3 |
| | | | |
| | | | |
| | | | |

REV. 3-14-16: REMOVED TRACT 3 AND ADDED TRACTS 3A AND 3B.

REV. 4-08-16: REMOVED TRACTS 3A AND 3B, AND COMBINED INTO TRACT 3.

REV. 12-08-16: ADJUSTED PROPOSED R.O.W. AND TOE OF SLOPES FOR TRACT 2, AND ADJUSTED DRIVEWAY RT. STA. 119+31 FOR TRACT 2.

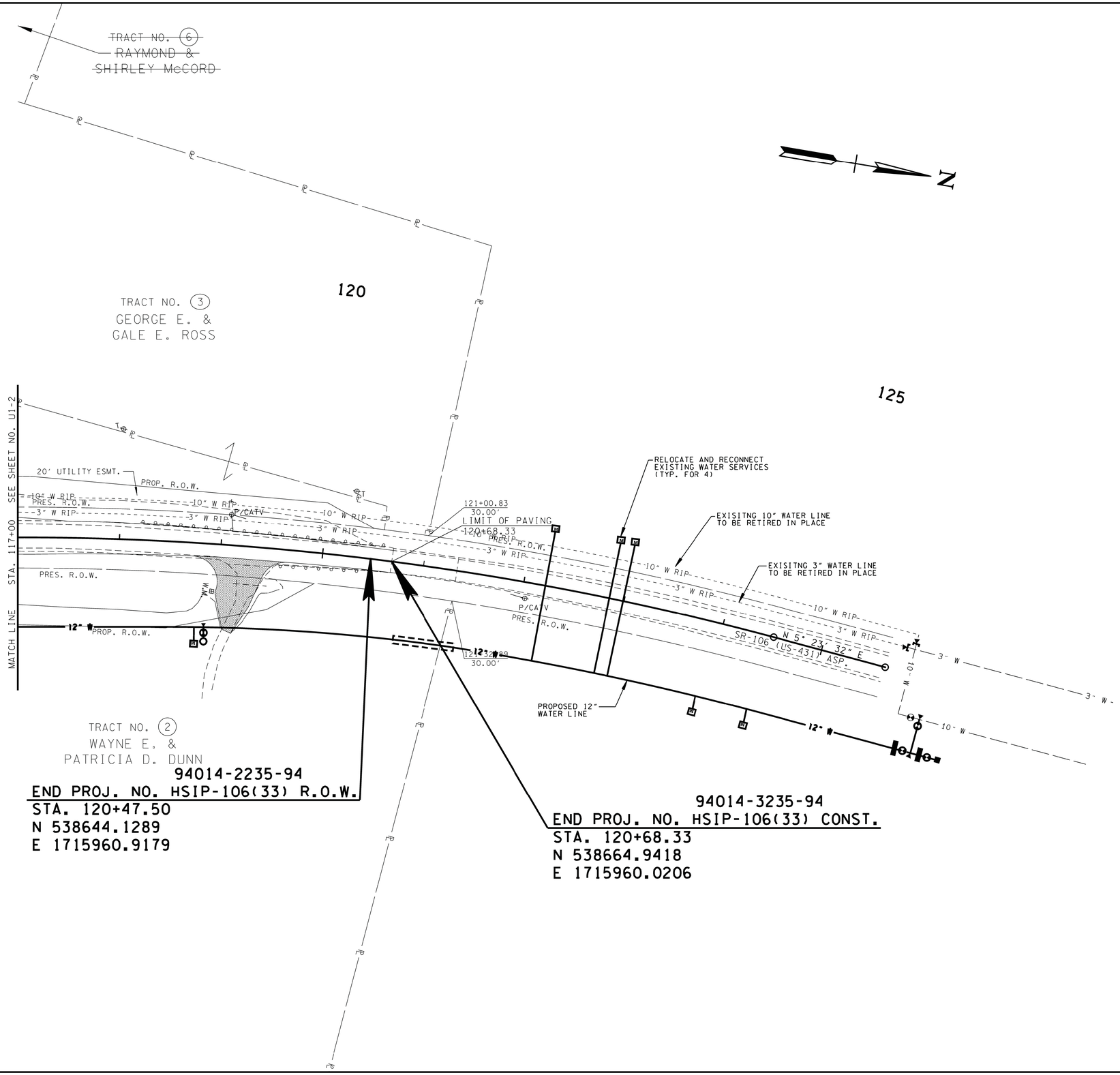


SEALED BY

COORDINATES ARE NAD/83(1995), ARE DATUM ADJUSTED BY THE FACTOR OF 1.00008 AND TIED TO THE TGRN. ALL ELEVATIONS ARE REFERENCED TO THE NAVD 1988.

STATE OF TENNESSEE
DEPARTMENT OF TRANSPORTATION

# UTILITIES

STA. 117+00 TO STA. 120+68.33

SCALE: 1"=50'

5/1/2017 11:50:14 AM
\\1j03wf01\03shared\SURVEY\DESIGN\U_1_Sheets\19837.00-Williamson\19837-00-ROW-Rev-02-20-17_19837.00_005-U1-3.sht

| TYPE | YEAR | PROJECT NO. | SHEET NO. |
|---|---|---|---|
| CONST | 2017 | HSIP-106(33) | U2-1 |
| | | 94014-3235-94 | |
| | | | |
| | | | |

# UTILITIES INDEX


| SHEET NAME | SHEET NUMBER |
|---|---|
| ESTIMATED QUANTITIES AND GENERAL NOTES | U2-1 |
| WATER LINE ADDITION - B.O.P. TO STA. 117+00 | U2-2 |
| WATER LINE ADDITION - STA. 117+00 TO E.O.P. | U2-3 |
| STANDARD DETAILS | U2-4 |
| STANDARD DETAILS | U2-5 |


## T.D.O.T. ENVIRONMENTAL NOTES:

1. RAINWATER WHICH COLLECTS IN THE UTILITY TRENCH SHALL BE PUMPED INTO A TEMPORARY DEWARTERING STRUCTURE OR FILTER BAG.

2. SILT FENCE TO BE INSTALLED ON THE DOWNSTREAM SIDE OF ALL STOCKPILED SOIL. TRENCHING ACROSS WET WEATHER CONVEYANCES TO BE DONE DURING NO FLOW CONDITIONS AND STABILIZED BY THE END OF THE WORK DAY.

3. UTILITY CROSSINGS FOR PERENNIAL STREAMS SHALL BE CONSTRUCTED IN ACCORDANCE WITH TDOT STANDARDS, AND NO WORK SHALL BE CONDUCTED IN FLOWING WATERS. TENNESSEE DEPARTMENT OF ENVIRONMENT AND CONSERVATION (TDEC) REGULATIONS APPLY TO THE UTILITIES IN THIS PROJECT IN REGARDS TO EROSION CONTROL AS WELL AS ALL WATER QUALITY PERMITS RECEIVED. THE UTILITY CONTRACTOR SHALL COMPLY WITH ALL REQUIREMENTS OF THE WATER QUALITY PERMITS AND THE STORM WATER POLLUTION PREVENTION PLAN. THE UTILITY CONTRACTOR IS ONLY RESPONSIBLE FOR EROSION CONTROL MEASURES FOR UTILITY CONSTRUCTION THAT IS INCLUDED IN THE STATE CONTRACT WORK.

4. IT IS THE RESPONSIBILITY OF THE UTILITY CONTRACTOR TO PROTECT FROM EROSION EXPOSED EARTH RESULTING FROM HIS OPERATIONS AND TO PROVIDE FOR CONTAINMENT OF SEDIMENT THAT MAY RESULT FROM HIS WORK. PRIOR TO BEGINNING WORK, ADEQUATE MEASURES MUST BE IN PLACE TO TRAP ANY PROGRESSION OF HIS WORK, EXPOSED EARTH AREAS SHALL BE STABILIZED AS SOON AS POSSIBLE TO PREVENT EROSION. AT NO TIME SHALL EXPOSED EARTH RESULTING FROM HIS OPERATIONS HAVE UNPROTECTED ACCESS TO FLOWING OFF-SITE AND BECOMING WATERS OF THE STATE.

5. FOR THE INSTALLATION OF BURIED UTILITIES (PIPES AND CABLES), TRENCHES SHALL BE BACKFILLED DAILY AS CONSTRUCTION PROCEEDS. BACKFILLED TRENCHES SHALL BE SEEDED AND MULCHED OR SODDED DAILY IF POSSIBLE BUT NO LATER THAN 7 DAYS AFTER BACKFILLED. ANY TEMPORARY SPOIL PILE OF EXCAVATED EARTH SHALL BE LOCATED WITHIN THE INSTALLED TDOT RIGHT EROSION CONTROL MEASURES OR RECEIVE SEPARATE EROSION CONTROL MEASURES FROM THE APPROVED TDOT STANDARD DRAWINGS. IF TRENCHES ARE NOT BACKFILLED OVERNIGHT, APPROPRIATE EROSION CONTROL MEASURES WILL BE INSTALLED BY THE UTILITY CONTRACTOR UNTIL SUCH TIME THE TRENCH IS BACKFILLED.

6. TRENCHES FORMED FOR THE INSTALLATION OF BURIED UTILITIES MAY CAUSE STORM WATER RUNOFF TO CONCENTRATE AT THE TRENCHLINE. IF THIS IS ANTICIPATED ADDITIONAL EROSION CONTROL MEASURES (SUCH AS CHECK DAMS, HAY BALES, ETC. BLANKETS) SHALL BE INSTALLED FROM THE APPROVED TDOT STANDARD DRAWINGS.

7. FOR THE INSTALLATION OF UNDERGROUND UTILITIES OUTSIDE OF THE HIGHWAY RIGHT-OF-WAY, ADDITIONAL TEMPORARY EROSION PREVENTION AND SEDIMENT CONTROL MEASURES SHALL BE INSTALLED PRIOR TO THE CLEARING (TRENCHING AND ASSOCIATED BLASTING) IN THOSE AREAS NECESSARY TO PREVENT SEDIMENT FROM LEAVING THE CONSTRUCTION AREA. THESE EROSION PREVENTION AND SEDIMENT CONTROL MEASURES SHALL REMAIN UNTIL THE BACKFILLED TRENCH IS STABILIZED WITH FINAL VEGETATIVE COVER.

8. THE CONTRACTOR SHALL RESTORE ALL AFFECTED WET WEATHER CONVEYANCES TO THE EXISTING TOPOGRAPHIC CONDITIONS (AS REQUIRED BY THE STATE).

9. THE UTILITY CONTRACTOR WILL PROVIDE APPROPRIATE EROSION CONTROL MEASURES TO REPLACE IN-PLACE CONTROL EROSION CONTROL MEASURES REMOVED TO FACILITATE THE INSTALLATION OF THE UTILITIES. REPLACEMENT EROSION CONTROL MEASURES WILL BE COORDINATED WITH THE STATE ENGINEER BEFORE COMMENCING WORK.


HB & TS UTILITY DISTRICT
500 DOWNS BLVD.
FRANKLIN, TENNESSEE 37064-3837
CONTACT: TOM PUCKETT
PHONE: (615) 794-7796
EMAIL: tpuckett_hbts@bellsouth.net


## GENERAL NOTES:

1. PAVEMENT REPLACEMENT: TEMPORARY PAVEMENT REPLACEMENT SHALL BE APPLIED TO ALL PAVED SURFACES WITHIN AREAS TO BE PAVED BY THE HIGHWAY CONTRACTOR. PERMANENT PAVEMENT REPLACEMENT (HOT MIX) SHALL BE APPLIED OUTSIDE HIGHWAY CONSTRUCTION AREA.

2. CRUSHED STONE BACKFILL: CRUSHED STONE BACKFILL SHALL BE USED WHERE LINES ARE LOCATED UNDER EXISTING AND PROPOSED DRIVING SURFACES (ROAD, DRIVEWAYS, ETC.) GRADATION OF STONE SHALL BE APPROVED BY ENGINEER.

3. WATER SERVICE: CONTRACTOR SHALL MAINTAIN WATER SERVICE TO ALL CUSTOMERS AT ALL TIMES EXCEPT FOR BRIEF INTERRUPTIONS DURING CONNECTIONS. ANY TEMPORARY SERVICE LINES REQUIRED TO MAINTAIN WATER SERVICES SHALL BE THE RESPONSIBILITY OF THE UTILITY CONTRACTOR AND NO ADDITIONAL COMPENSATION SHALL BE MADE FOR TEMPORARY SERVICE CONNECTIONS, UNLESS OTHERWISE STATED.

4. CONTRACTOR NOTE: CONTRACTOR IS REMINDED THAT HIGHWAY CONSTRUCTION AND OTHER UTILITY RELOCATIONS WILL BE IN PROGRESS DURING THE CONSTRUCTION OF THIS PROJECT. THE CONTRACTOR SHALL SCHEDULE AND COORDINATE HIS WORK WITH OTHER CONTRACTORS, HB & TS UTILITY DISTRICT AND OTHER UTILITIES.

   A CONSTRUCTION SEQUENCE SCHEDULE SHALL BE PREPARED BY THE CONTRACTOR AND SUBMITTED TO HB & TS UTILITY DISTRICT FOR THEIR APPROVAL. PARTICULAR ATTENTION SHALL BE GIVEN TO TIE-INS, SERVICE CONNECTIONS AND ABANDONMENT OF FACILITIES.

5. CONTRACTOR NOTE: ALL RELOCATION PLANS HAVE BEEN DEVELOPED FROM HIGHWAY PLANS FURNISHED BY THE TENNESSEE DEPARTMENT OF TRANSPORTATION. CONTRACTOR TO VERIFY WITH THE STATE THE LOCATION AND ELEVATIONS OF PROPOSED FACILITIES AND ADJUST. ANY TEMPORARY SERVICE CONNECTIONS WILL BE THE CONTRACTORS RESPONSIBILITY AND EXPENSE.

6. ALL WATER LINES SHALL HAVE A MINIMUM OF THIRTY-SIX INCHES (36") OF COVER. PROVIDE FORTY-EIGHT INCHES (48") OF COVER UNDER ROADWAYS AND DITCHES UNLESS OTHERWISE NOTED.

7. AFTER ALL NEW WATER LINES ARE TESTED, DISINFECTED AND PLACED IN SERVICE; THE EXISTING WATER LINE TO BE ABANDONED SHALL BE CAPPED AS SHOWN ON PLANS AND AS DIRECTED BY ENGINEER.

8. CONTRACTOR SHALL ADJUST ALL METER BOXES, VALVE BOXES, ETC. AFTER HIGHWAY CONTRACTOR COMPLETES FINAL GRADING. CONCRETE COLLARS AROUND VALVE BOXES SHALL BE POURED AT THIS TIME.

9. CONTRACTOR TO VERIFY ALL LINE SIZES ON SIDE ROADS IN FIELD PRIOR TO ORDERING FITTINGS FOR TIE-OVERS, ADJUSTMENTS WILL BE MADE ACCORDINGLY.

10. ALL VALVES AND OTHER SALVAGEABLE MATERIALS TO REMAIN THE PROPERTY OF HB & TS UTILITY DISTRICT.

11. CONTRACTOR TO OBTAIN APPROVAL FROM T.D.O.T. AND WILLIAMSON COUNTY HIGHWAY DEPARTMENT FOR ALL HIGHWAY CROSSINGS. SAFETY PROCEDURES AND ALL ACTIVITIES SHALL CONFORM TO T.D.O.T. STANDARDS AND CONDITIONS.

12. CONTRACTOR TO CONSTRUCT FACILITIES PRIOR TO GRADING UNLESS OTHERWISE DIRECTED.

13. CONTRACTOR SHALL FURNISH ALL SURVEYING PERSONNEL TO ENSURE PROPER LOCATION AND DEPTH OF LINE IN ACCORDANCE WITH THESE PLANS AND ONLY MAKE CHANGES OR MODIFICATIONS NEEDED TO AVOID CONFLICT WITH ROAD CONSTRUCTION.

14. SOIL EROSION: THE CONTRACTOR SHALL ADHERE TO ALL CONTROL MEASURES AS REQUIRED BY FEDERAL, STATE AND LOCAL AGENCIES DURING THE LIFE OF THIS PROJECT TO CONTROL EROSION AND WATER POLLUTION. THE CONTRACTOR SHALL DEVELOP AN EROSION CONTROL PLAN AND OBTAIN ACCEPTANCE FROM THE TENNESSEE DEPARTMENT OF TRANSPORTATION AND THE ENGINEER. CONTRACTOR SHALL APPLY FOR A STORM WATER POLLUTION PREVENTION PERMIT FROM THE TENNESSEE DEPARTMENT OF ENVIRONMENT AND CONSERVATION (TDEC), DIVISION OF WATER POLLUTION CONTROL, 6th FLOOR, L & C ANNEX, 401 CHURCH STREET, NASHVILLE, TN 37243-1534.

15. ROTATE FIRE HYDRANTS TO FACE ROAD AS DIRECTED.

16. CONTRACTOR IS ALLOWED TO MAKE MINOR FIELD ADJUSTMENTS TO LINE LOCATIONS TO AVOID TOPOGRAPHICAL CONFLICTS. ADJUSTMENTS REQUIRING ADDITIONAL MATERIALS MUST BE APPROVED BY T.D.O.T., THE ENGINEER AND THE UTILITY.

17. IN SUCH A CASE WHERE ABANDONED OR RETIRED FACILITIES ARE SHOWN IN GROUND WITHIN THE CONSTRUCTION LIMITS, THE UTILITY WILL DEFAULT TO TDOT WITH REGARD TO THE NECESSITY FOR ANY DEMOLITION AND REMOVAL OR ANY ABANDONED OR RETIRED FACILITIES UNLESS SPECIFICALLY NOTED OTHERWISE ON THE PLANS.

18. ALL VALVES, FITTINGS AND OTHER APPURTANENCES SHALL BE INSTALLED USING MAGALUG RESTRAINT DEVICES OR UTILITY ENGINEER APPROVED EQUAL. COST OF RESTRAINTS SHALL BE INCLUDED IN COST OF VALVE, FITTING, ETC. AND NO ADDTIONAL COMPENSATION SHALL BE MADE FOR RESTRAINTS.

## ESTIMATED WATER LINE QUANTITIES

| ITEM NO. | DESCRIPTION | UNIT | QUAN. | % UTILITY | % PROJECT | FOOTNOTE |
|---|---|---|---|---|---|---|
| 795-01.16 | 18IN DIP SLIP JOINT WATER LINE | L.F. | 300 | 10% | 90% | 1 |
| 795-01.15 | 18IN DIP RESTRAINED JOINT WATER LINE | L.F. | 150 | 10% | 90% | 1 |
| 795-60.01 | 18IN BALL AND SOCKET DUCTILE IRON PIPE | L.F. | 126 | 10% | 90% | 1 |
| 795-01.10 | 12IN DIP SLIP JOINT WATER LINE | L.F. | 1300 | 10% | 90% | 1 |
| 795-60.02 | 12IN BALL AND SOCKET DUCTILE IRON PIPE | L.F. | 108 | 10% | 90% | 1 |
| 795-01.08 | 10IN DIP SLIP JOINT WATER LINE | L.F. | 20 | 10% | 90% | 1 |
| 795-01.03 | 6IN DIP RESTRAINED JOINT WATER LINE | L.F. | 140 | 10% | 90% | 1 |
| 795-03.05 | 6IN PVC WATER LINE | L.F. | 570 | 10% | 90% | 1 |
| 795-03.02 | 2IN PVC WATER LINE | L.F. | 20 | 10% | 90% | 1 |
| 795-09.62 | 1IN PEXA SERVICE PIPE | L.F. | 800 | 10% | 90% | 7 |
| 795-05.69 | BORE/JACK 30IN STEEL CASING PIPE-UNCON. | L.F. | 140 | 10% | 90% | 10 |
| 795-05.63 | BORE/JACK 12IN STEEL CASING PIPE-UNCON. | L.F. | 140 | 10% | 90% | 10 |
| 795-05.14 | HDD 3IN HDPE CASING PIPE - UNCON | L.F. | 750 | 10% | 90% | 2 |
| 795-07.10 | 10IN X 10IN TAPPING SLEEVE AND VALVE | EACH | 1 | 10% | 90% | 4 |
| 795-07.03 | 6IN X 6IN TAPPING SLEEVE AND VALVE | EACH | 2 | 10% | 90% | 4 |
| 795-08.16 | 18IN GATE VALVE ASSEMBLY | EACH | 3 | 10% | 90% | 5 |
| 795-08.09 | 12IN GATE VALVE ASSEMBLY | EACH | 3 | 10% | 90% | 5 |
| 795-08.04 | 6IN GATE VALVE ASSEMBLY | EACH | 7 | 10% | 90% | 5 |
| 795-08.01 | 2IN GATE VALVE ASSEMBLY | EACH | 1 | 10% | 90% | 5 |
| 795-08.02 | 3IN GATE VALVE ASSEMBLY | EACH | 1 | 10% | 90% | 5 |
| 795-11.02 | FIRE HYDRANT ASSEMBLY | EACH | 5 | 10% | 90% | |
| 795-11.01 | BLOW-OFF ASSEMBLY | EACH | 2 | 10% | 90% | |
| 795-13.01 | DI FITTINGS | LBS | 1500 | 10% | 90% | 13 |
| 795-14.02 | CLASS B CONCRETE | C.Y. | 30 | 10% | 90% | |
| 795-14.08 | RESTORE ASPHALT | S.Y. | 15 | 10% | 90% | |
| 795-14.10 | RESTORE GRAVEL | S.Y. | 15 | 10% | 90% | |
| 795-06.02 | CONNECT TO 3IN WATER LINE | EACH | 1 | 10% | 90% | 3 |
| 795-09.01 | 3/4IN WATER SERVICE METER ASSEMBLY | EACH | 10 | 10% | 90% | 6 |

FOOTNOTE 1:
INCLUDES ALL MATERIALS, LABOR, EQUIPMENT FOR COMPLETE INSTALLATION OF PIPE INCLUDING BUT NOT LIMITED TO TRAFFIC CONTROL, MATERIALS, EQUIPMENT, EXCAVATION IN BOTH UNCONSOLIDATED AND ROCK, REMOVAL AND REPLACEMENT OF UNSUITABLE SOIL, ENVELOPE/BEDDING MATERIAL, BACKFILLING, FLOWABLE FILL, THRUST BLOCKING, CONCRETE DEADMAN, PIPE FUSION, TRACER WIRE, WARNING TAPE, APPURTENANCES, TEMPORARY/PERMANENT SHORING, MAINTAINING THE TRENCH, TESTING, FLUSHING, DISINFECTION, BACTERIOILOGICAL SAMPLING, TEMPORARY/PERMANENT SURFACE RESTORATION, AND ANY OTHER LABOR OR MATERIAL REQUIRED TO COMPLETE THE WORK AS SPECIFIED ON THE PLANS.

FOOTNOTE 2:
INCLUDES ALL MATERIALS, LABOR, EQUIPMENT, AND TRAFFIC CONTROL, INCLUDING BUT NOT LIMITED TO FLUID CONTAINMENT FOR COMPLETE HORIZONTAL DIRECTIONAL DRILLING INSTALLATION OF CASING PIPE OR UNCASED CARRIER PIPE IN BOTH UNCONSOLIDATED SOIL OR ROCK. IF CASING PIPE HAS CARRIER PIPE, THE CARRIER PIPE SHALL BE PAID AT THE OPEN CUT ITEM.

FOOTNOTE 3:
INCLUDES ALL MATERIALS, LABOR, AND EQUIPMENT NECESSARY FOR CONNECTING TO AN EXISTING WATER LINE INCLUDING TRAFFIC CONTROL.

FOOTNOTE 4:
INCLUDES ALL MATERIALS, LABOR AND EQUIPMENT INCLUDING BUT NOT LIMITED TO TAPPING SLEEVE, VALVE, VALVE BOX, BOX ADJUSTMENT, VALVE BOX COLLAR, VALVE MARKER, EXCAVATION, BEDDING, BACKFILL, BLOCKING AND RESTRAINT, TAP OF EXISTING LINE, AND TRAFFIC CONTROL.

FOOTNOTE 5:
INCLUDES ALL MATERIALS, LABOR AND EQUIPMENT INCLUDING BUT NOT LIMITED TO FITTINGS, VALVE, VALVE STEM EXTENSIONS, VALVE BOX AND COVER, BOX ADJUSTMENT, VALVE BOX COLLAR, VALVE MARKER, EXCAVATION, BEDDING, BACKFILL, BLOCKING, AND TRAFFIC CONTROL.

FOOTNOTE 6:
INCLUDES ALL MATERIALS, LABOR AND EQUIPMENT INCLUDING BUT NOT LIMITED TO MACHINERY, TOOLS OR APPARATUS NECESSARY FOR INSTALLATION OF ASSEMBLIES AS DESCRIBED IN THE PLANS AND SPECS EXCEPT FOR SERVICE LINE WHICH IS PAID SEPERATELY FOR EACH FOOT INSTALLED.

FOOTNOTE 7:
INCLUDES ALL MATERIALS, LABOR AND EQUIPMENT FOR COMPLETE INSTALLATION OF SERVICE LINE OR CASING FOR SERVICE LINE ON LONG SIDE AND SHORT SIDE OF MAIN.

FOOTNOTE 8:
INCLUDES ALL MATERIALS, LABOR AND EQUIPMENT FOR COMPLETE INSTALLATION OF UNIT OR LUMP SUM ITEM AS SPECIFIED ON BID FORM.

FOOTNOTE 9:
INCLUDES ALL MATERIALS, LABOR AND EQUIPMENT FOR REMOVAL OF ITEM.

FOOTNOTE 10:
INCLUDES ALL MATERIALS, LABOR AND EQUIPMENT INCLUDING BUT NOT LIMITED TO CASING PIPE, PIPE SPACERS, CASING END SEALS, FITTINGS, TRACER WIRE, WARNING TAPE, UTILITY LINE MARKERS AND TRAFFIC CONTROL. IF CASING PIPE HAS CARRIER PIPE, THE CARRIER PIPE SHALL BE PAID AT THE OPEN CUT ITEM.

FOOTNOTE 11:
INCLUDES ALL MATERIALS, LABOR AND EQUIPMENT, SETUP AND TRAFFIC CONTROL

FOOTNOTE 12:
INCLUDES ALL MATERIALS, LABOR AND EQUIPMENT FOR REMOVAL OF EXISTING WATER SERVICE METER ASSEMBLY AND INSTALLING AT NEWLY IDENTIFIED LOCATION

FOOTNOTE 13:
INCLUDES FITTINGS, GLANDS AND RESTRAINT DEVICES DESCRIBED IN POUNDS.

JAMES C. HAILEY & COMPANY
JCH PN 16109

WATER RELOCATION

ESTIMATED QUANTITIES AND GENERAL NOTES

| TYPE | YEAR | PROJECT NO. | SHEET NO. |
|---|---|---|---|
| CONST | 2017 | HSIP-106(33) | U2-2 |
| | | 94014-3235-94 | |
| | | | |
| | | | |

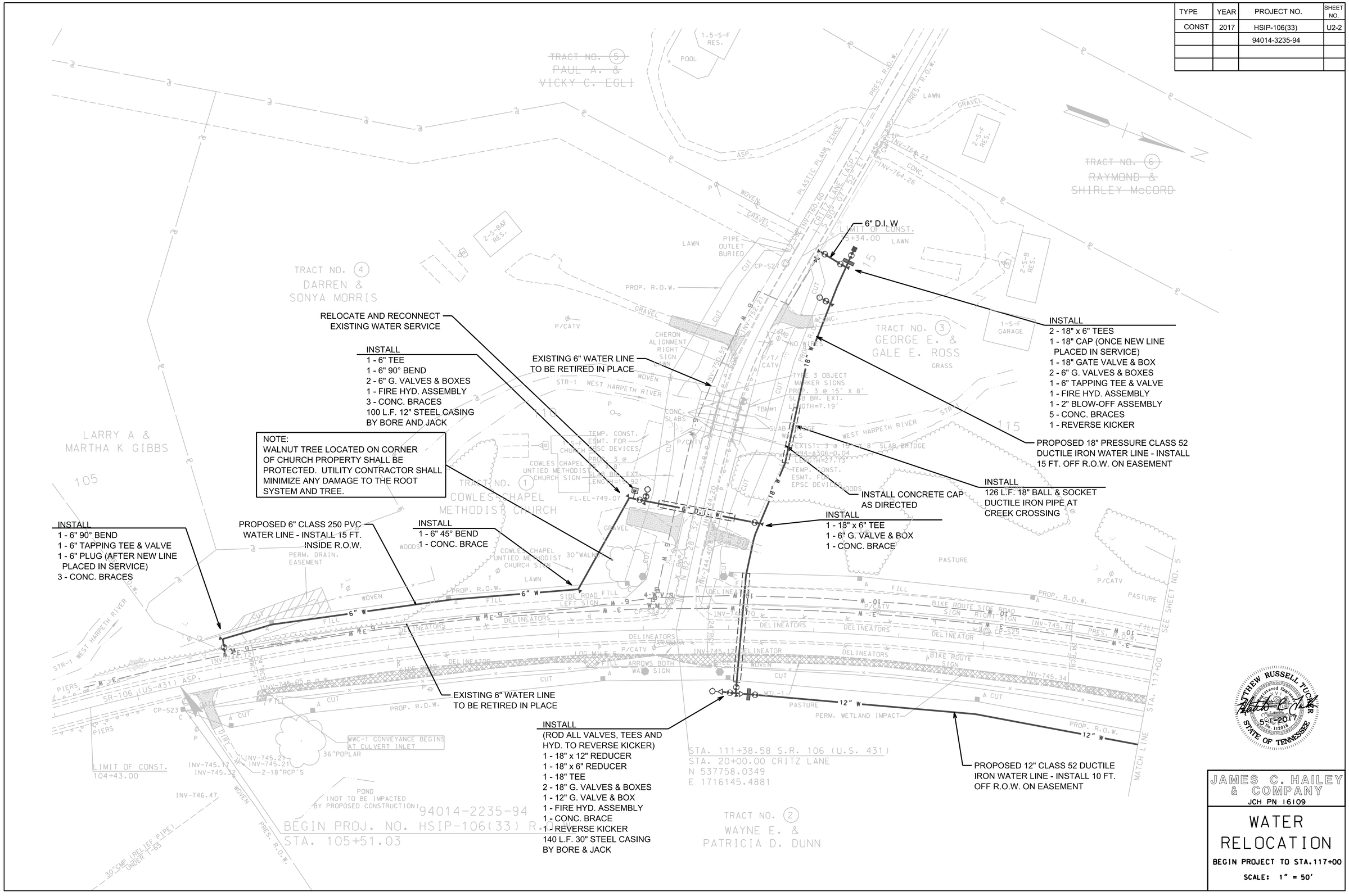





JAMES C. HAILEY & COMPANY
JCH PN 16109

# WATER RELOCATION

BEGIN PROJECT TO STA.117+00

SCALE: 1" = 50'

| TYPE | YEAR | PROJECT NO. | SHEET NO. |
|---|---|---|---|
| CONST | 2017 | HSIP-106(33) | U2-3 |
| | | 94014-3235-94 | |
| | | | |
| | | | |

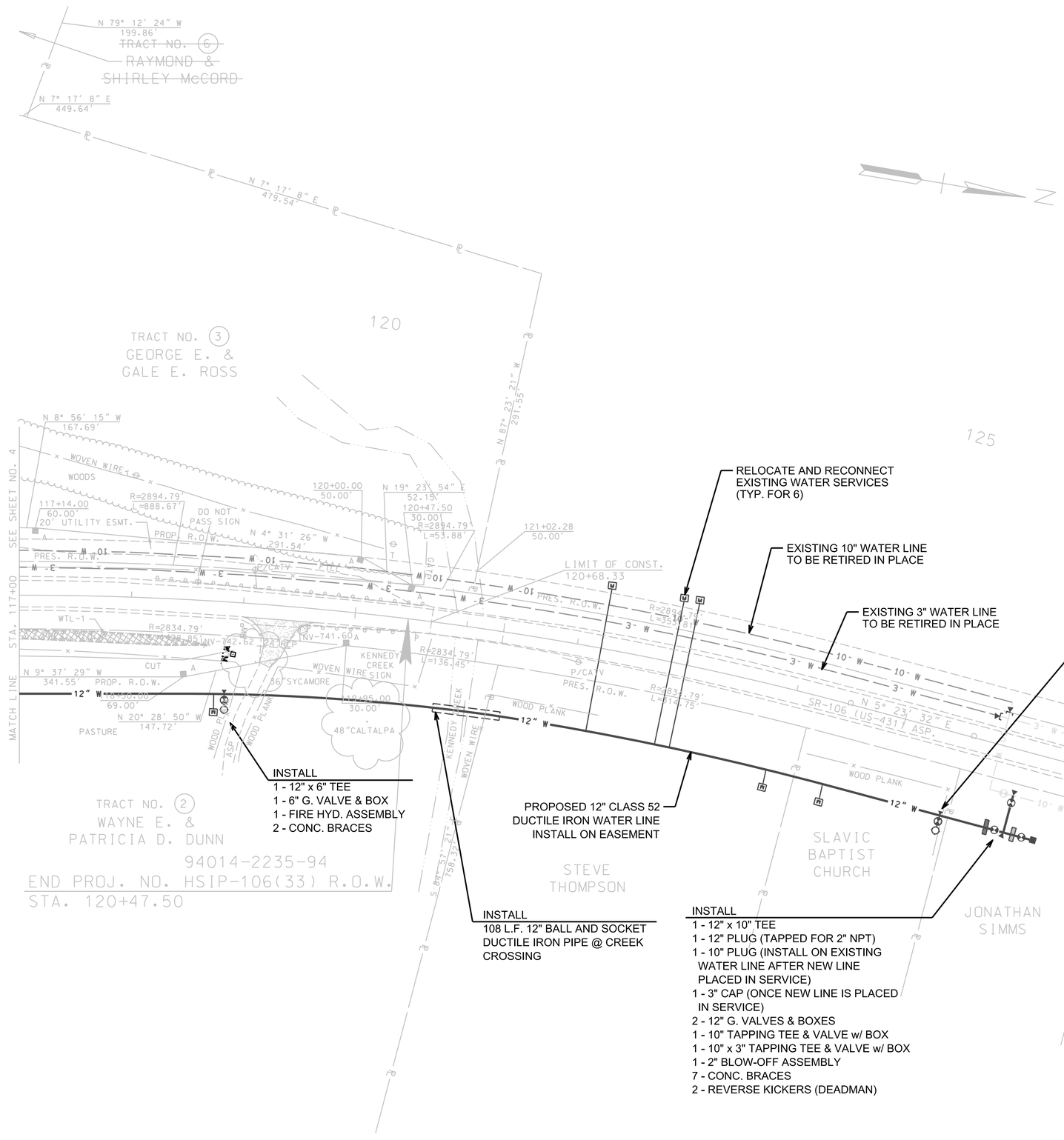


JAMES C. HAILEY & COMPANY
JCH PN 16109

# WATER RELOCATION

STA.117+00 TO E.O.P.

SCALE: 1" = 50'

| TYPE | YEAR | PROJECT NO. | SHEET NO. |
|---|---|---|---|
| CONST | 2017 | HSIP-106(33) | U2-4 |
| | | 94014-3235-94 | |
| | | | |
| | | | |

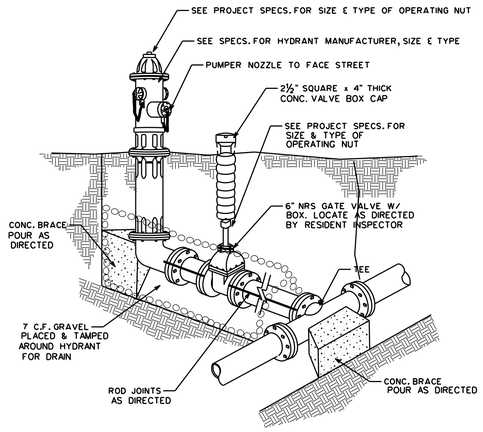


TYPICAL FIRE HYDRANT INSTALLATION

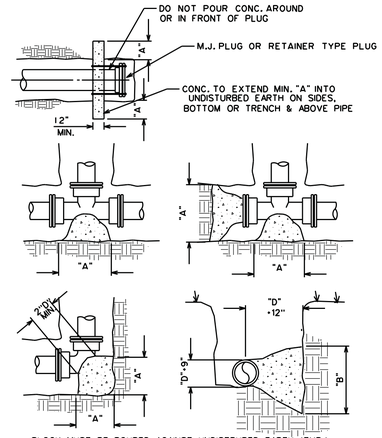


CONCRETE BRACE DIMENSION SCHEDULE

| PIPE SIZE | 90° BEND | | 45° BEND | | 22 1/2° BEND | | TEE | | DEAD END | |
|---|---|---|---|---|---|---|---|---|---|---|
| | A | B | A | B | A | B | A | B | A | B |
| 6" OR UNDER | 2'-0" | 2'-0" | 1'-6" | 1'-6" | 1'-6" | 1'-6" | 2'-0" | 2'-0" | 1'-6" | 1'-6" |
| 8" | 2'-3" | 2'-3" | 1'-9" | 1'-9" | 1'-9" | 1'-9" | 2'-6" | 2'-6" | 2'-0" | 2'-0" |
| 10" | 2'-6" | 2'-6" | 2'-0" | 2'-0" | 2'-0" | 2'-0" | 3'-0" | 3'-0" | 2'-4" | 2'-4" |
| 12" | 3'-6" | 3'-0" | 2'-6" | 2'-6" | 2'-3" | 2'-3" | 4'-0" | 3'-6" | 2'-9" | 2'-9" |
| 16" | 4'-0" | 4'-0" | 3'-0" | 3'-0" | 2'-6" | 2'-6" | 5'-6" | 4'-0" | 4'-0" | 3'-0" |
| 20" | 5'-6" | 4'-6" | 4'-0" | 3'-6" | 3'-0" | 3'-0" | 6'-6" | 5'-0" | 5'-0" | 3'-6" |
| 24" | 7'-0" | 5'-0" | 5'-0" | 4'-0" | 3'-6" | 3'-6" | 8'-0" | 6'-0" | 6'-0" | 4'-0" |
| 30" | 9'-0" | 6'-0" | 6'-6" | 4'-6" | 4'-0" | 4'-0" | 12'-0" | 6'-0" | 7'-9" | 5'-0" |

CONC. THRUST BLOCK (BRACE)

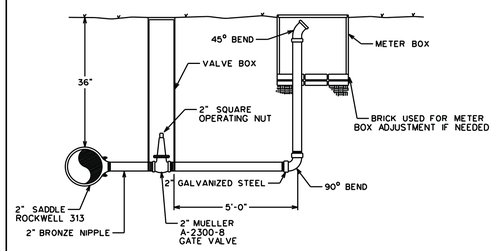


2" BLOW-OFF DETAIL W/ OPERATING NUT DETAIL

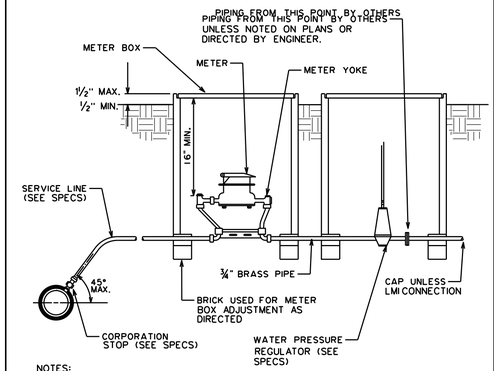


NOTES:

1. NO. 17 CRUSHED STONE TO BE PROVIDED FOR METER SUPPORT IF PLASTIC SERVICE LINE IS USED.
2. SERVICE LINE TO RUN FROM MAIN TO METER BOX ALONG THE SHORTEST, MOST DIRECT ROUTE POSSIBLE UNLESS OTHERWISE DIRECTED BY RESIDENT INSPECTOR.
3. SERVICE LINE TO BE CONTINUOUS FROM MAIN LINE TO METER YOKE WITHOUT COUPLINGS.

TYPICAL SERVICE CONNECTION

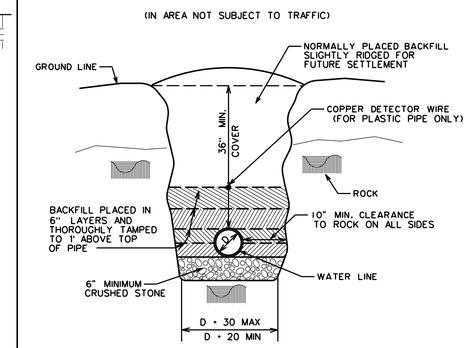


TYPICAL WATER LINE SECTION FOR ROCK TRENCH

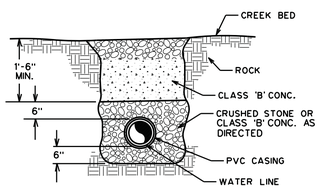


IN ROCK

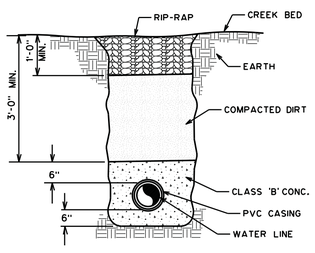


IN EARTH

TYPICAL STREAM CROSSING DETAIL

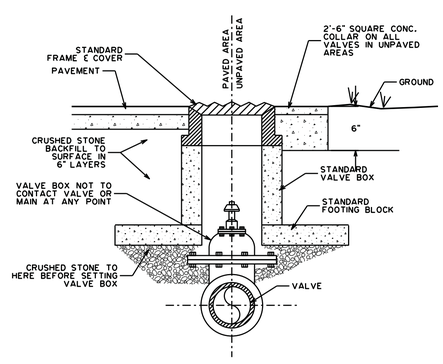


TYPICAL VALVE BOX SETTING
STANDARD CONCRETE VALVE BOX

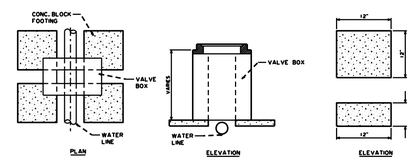


VALVE BOX FOOTING BLOCK

NOTES:

1. FOUR (4) CONCRETE BLOCKS OF THE SIZE AND SHAPE SHOWN ARE TO BE PLACED UNDER EACH BOX, ONE UNDER EACH CORNER OF BOX.
2. NO REINFORCING STEEL IN FOOTING BLOCKS. CONCRETE MIX TO BE (1) PART CEMENT, (2) PARTS SAND AND (4) PARTS NO. 2 CRUSHED STONE OR GRAVEL. VOLUME FOR ONE BLOCK = .333 CU.FT. WEIGHT OF ONE BLOCK = 50 LBS +. WEIGHT FOR ALL FOUR BLOCKS = 200 LBS. BEARING AREA ON SOIL = 576 SQ.IN.

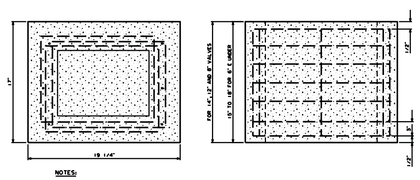


NOTES:

1. REINFORCING TO BE 1/4" STEEL REINFORCING RODS PLACED HORIZONTALLY IN SQUARES 16 1/4" x 14" AND TO BE STAGGERED APPROXIMATELY AS SHOWN ON PLAN, ONE FOR EVERY 3" OF HEIGHT OF BOX. VERTICAL BARS ARE TO BE 1" SHORTER THAN THE HEIGHT OF THE BOX AND SHALL BE PLACED IN EACH CORNER OF THE BOX AND AT THE HALFWAY POINT TO EACH SIDE OF THE BOX USING 8 RISERS TO THE BOX. TOTAL LENGTH OF REINFORCING ROD FOR BOX APPROX. 47'
2. CONCRETE MIXTURE TO BE (1) PART CEMENT, (2) PARTS SAND AND (4) PARTS NO. 2 CRUSHED STONE OR GRAVEL. TOTAL VOLUME OF MIXTURE FOR BOX APPROXIMATELY 2 CU.FT.

STANDARD CONCRETE VALVE BOX

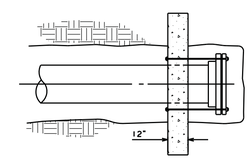


| PIPE SIZE | 2 | 4 | 6 | 8 | 10 | 12 | 16 | 20 |
|---|---|---|---|---|---|---|---|---|
| # OF RODS | 2 | 2 | 4 | 5 | 7 | 10 | 16 | 24 |

CONC. THRUST BLOCK (BRACE)
3/4" RODS - DEAD END

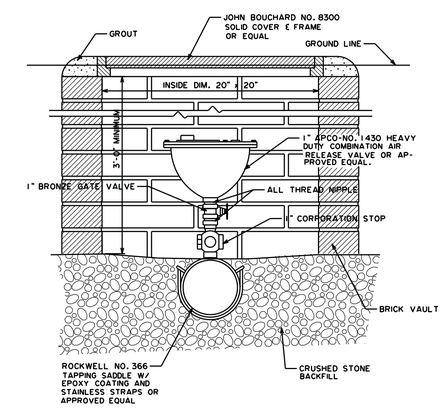


AIR RELEASE VALVE ASSEMBLY

JAMES C. HAILEY & COMPANY
JCH PN 16109

WATER RELOCATION

STANDARD DETAILS

SCALE: NONE

| TYPE | YEAR | PROJECT NO. | SHEET NO. |
|---|---|---|---|
| CONST | 2017 | HSIP-106(33) | U2-5 |
| | | 94014-3235-94 | |
| | | | |
| | | | |

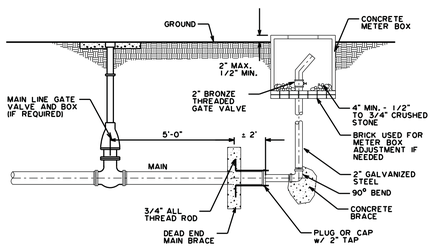


## TYPICAL END OF LINE BLOW-OFF MAINS 4" AND LARGER

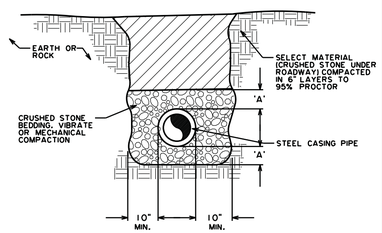


DIMENSION 'A' - FOR UNDER 12" PIPE = 6" MINIMUM
FOR 12" AND OVER PIPE = 12" MINIMUM

## TRENCH SECTION FOR CASING BY OPEN CUT

NOTES:

1. BACKFILL ALL EXCAVATIONS IN ACCORDANCE WITH THE SPECIFICATIONS.
2. LAY PIPE TO MEANDER IN THE TRENCH.

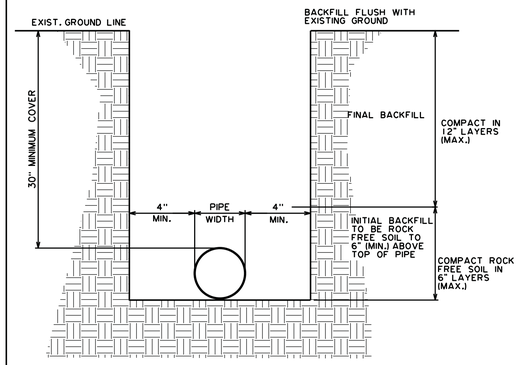


## TYPICAL TRENCH SECTION IN SOIL EXCAVATION

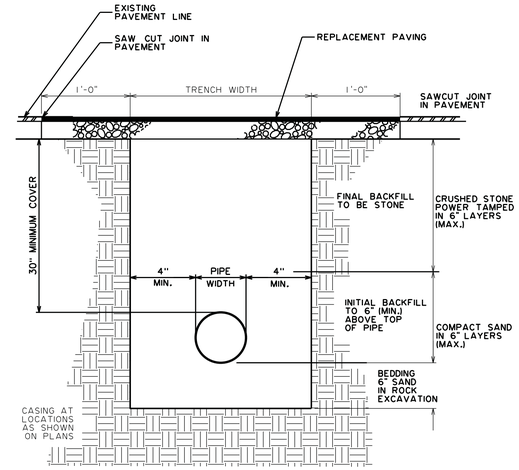


NOTES:

1. CRUSHED STONE DRIVES SHALL BE PREPARED IN ACCORDANCE WITH THIS DETAIL EXCEPT THAT THE REPLACEMENT PAVING SHALL BE DELETED.
2. WHEN CASING IS REQUIRED, THE PIPE WIDTH AND MINIMUM COVER SHALL REFER TO THE CASING DIAMETER.

## TYPICAL TRENCH SECTION UNDER PAVEMENT

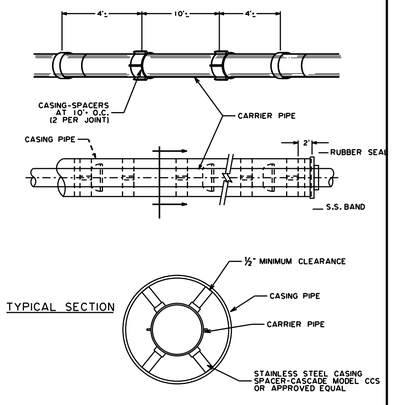


NOTES:

1. ALL JOINTS WITHIN CASING TO BE RESTRAINED.
2. CARRIER PIPE TO BE IN CENTER OF CASING TO PROVIDE RESTRAINT AGAINST MOVEMENT

## WATER LINE CASING DETAIL

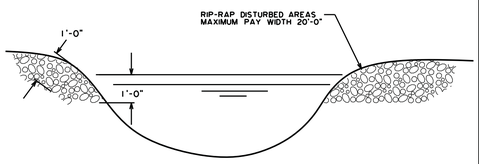


## RIP-RAP DETAIL STREAM CROSSING SECTION

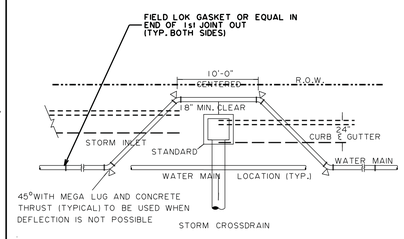


NOTES:

1) USE OPTIONAL OFFSET ONLY WHEN NO CONFLICT WITH OTHER UTILITIES/LANDSCAPING IN ORDER TO MAINTAIN STANDARD 36" COVER
2) FIELD LOK GASKET MAY BE OMITTED IF FITTING OR VALVE IS LOCATED WITHIN 100 L.F. OF OFFSET
3) PIPE DEFLECTION MAY BE USED IN LIEU OF FITTINGS
4) NO PLANTED TREE BULBS TO BE WITHIN 5'-0" OF WATER LINE.

## OPTIONAL HORIZONTAL WATER MAIN OFFSET PLAN VIEW

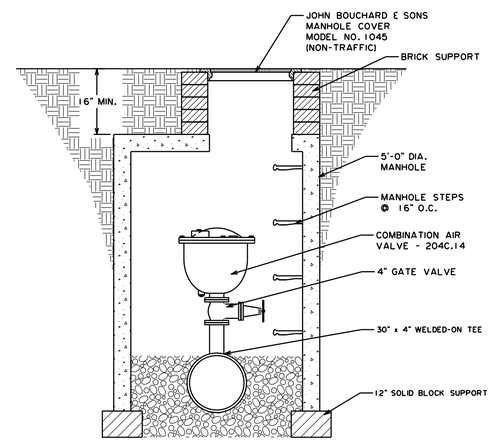


## COMBINATION AIR VALVE

JAMES C. HAILEY & COMPANY
JCH PN 16109

# WATER RELOCATION

STANDARD DETAILS

SCALE: NONE