| TYPE | YEAR | PROJECT NO. | SHEET NO. |
|---|---|---|---|
| R.O.W. | 2015 | HSIP-106(33) | 6A |
| CONST. | 2017 | HSIP-106(33) | 7 |

REV. 3-14-16: UPDATED TRACT NO. FOR PVT. DR. LT. STA. 16+05 FROM TRACT NO. 3 TO TRACT NO. 3B. AND FIELD ENT. LT. STA. 18+81 FROM TRACT NO. 3 TO TRACT NO. 3A.

REV. 4-08-16: UPDATED TRACT NO. FOR PVT. DR. LT. STA. 16+05 FROM TRACT NO. 3B TO TRACT NO. 3. AND FIELD ENT. LT. STA. 18+81 FROM TRACT NO. 3A TO TRACT NO. 3.

REV. 9-22-16: MOVED 20' BUS. ENT. FROM STA. 18+82 TO STA. 18+97 RT. TRACT 1.

REV. 12-08-16: UPDATED LIMIT OF CONST. AND ADDED SIDE DRAIN FOR PVT. DR. RT. STA. 119+31 ON TRACT NO. 2.

REV. 02-20-17: MOVED PVT. DR. LT. FOR TRACT 3 FROM STA. 16+05 TO STA. 16+04 AND UPDATED SIDE DRAIN LENGTH.

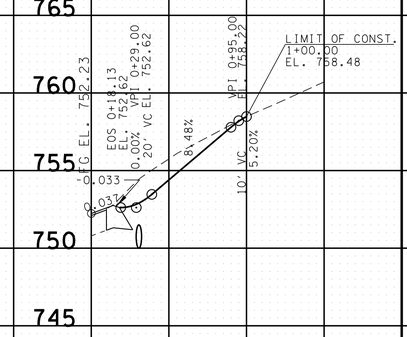


CRITZ LANE
PVT. DR. RT. 16+59.00
TRACT NO. 4
(32' - 18" SD REQD.)

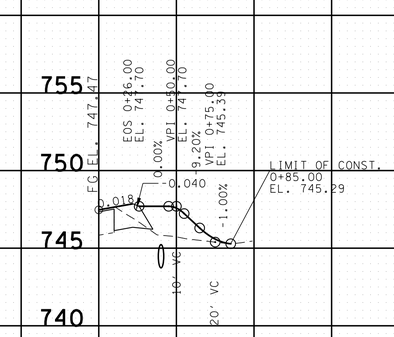


CRITZ LANE
BUS. ENT. RT. 18+97.00
TRACT NO. 1
(44' - 18" SD REQD.)

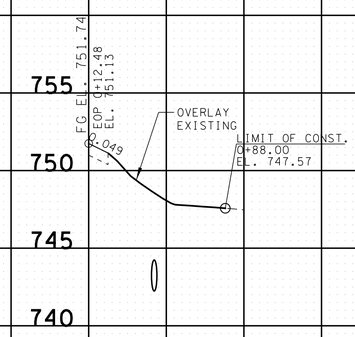


SR-106
PVT. DR. RT. 119+31.00
TRACT NO. 2
(78' - 24" SD REQD.)

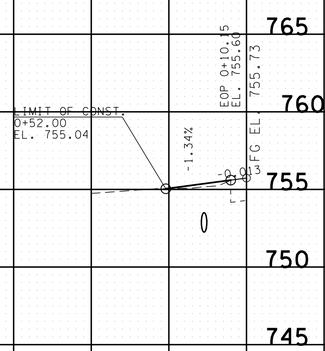


CRITZ LANE
PVT. DR. LT. 16+04.00
TRACT NO. 3
(44' - 15" SD REQD.)

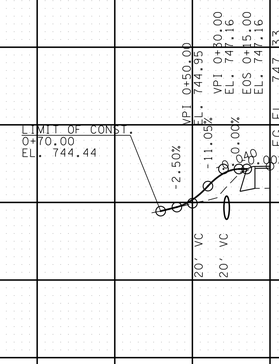


CRITZ LANE
FIELD ENT. LT. 18+81.00
TRACT NO. 3
(32' - 18" SD REQD.)

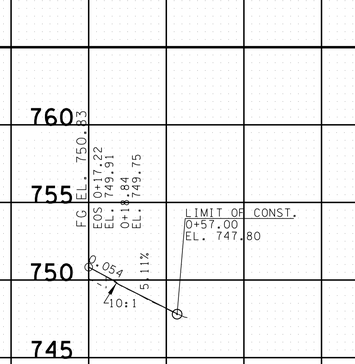


SR-106
FIELD ENT. RT. 105+79.00
TRACT NO. 2
(NO SD REQD.)

SEALED BY

STATE OF TENNESSEE
DEPARTMENT OF TRANSPORTATION

# PRIVATE DRIVE, BUSINESS, AND FIELD ENTRANCE PROFILES

SCALE: 1"=50' HORIZ.
1"=5' VERT.

9/18/2017 5:04:08 PM
T:\TDOT\Williamson_SR106_Critz\007.sht